ORBIS

PLUG –IN DIGITAL TIME SWITCH

TEMPO +

OPERATING INSTRUCTIONS

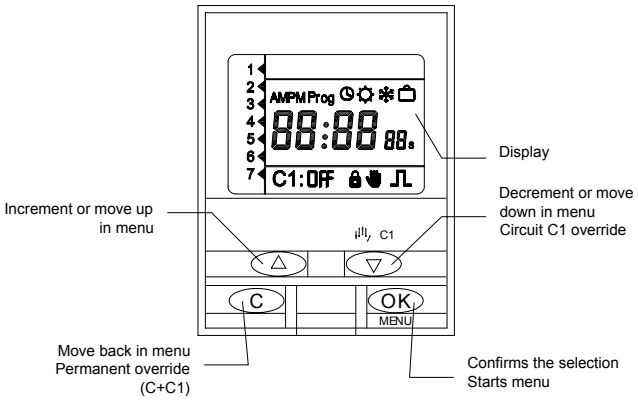

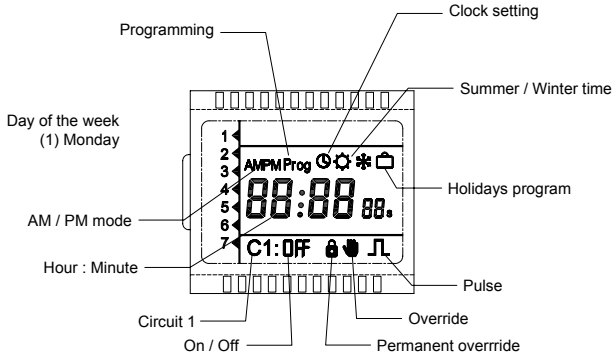

DESCRIPTION

The TEMPO + is a plug-in programmer designed for controlling small household appliances, lamps, etc.
Includes pulse programming from 1 to 59 seconds and up to 32 block memory spaces. Automatic Winter – Summer official time adjustment.

STARTING UP AND PROGRAMMING

The TEMPO + leaves the factory with the battery disconnected and this should be inserted into position with the upper section first as shown on the diagram. The plug-in digital time switch is already programmed with the official automatic Winter – Summer official time adjustment activated (last Sunday in March and last Sunday in October).
Programming is based in menus (indicated by icons):
Programming: " PROG".
Clock setting: " ".
Winter / Summer official time change: " ".
Holidays period programming: " ".

RESET

Although the clock of the device is already programmed, if a RESET is needed (blank display, inconsistent data, etc), press at the same time the four keys during 3 seconds. In this moment, the device loses all data and goes to clock setting mode, directly to program year, month, day, day of the week, hour and minutes.

CLOCK SETTING

For clock setting, press key "OK" to access to the Menu and with keys (Δ) and (∇) select icon () and press "OK". Display shows the year with the last two figures blinking; update the year by pressing keys (Δ) and (∇) and validate it with key "OK". The same operation should be made to update month, day, day of the week, hour and minutes. By accepting minutes with "OK", it automatically goes to normal mode.
To change the time mode (24 h / 12 h am-pm) proceed as follows: accept year, month, day and day of the week; while hour is blinking, press (Δ) and (∇) at the same time. After that, the time mode has change.

PROGRAMMING

To program the device, press "OK" to enter to the menu. By pressing again "OK" the menu "PROG" is entered and the display shows the first programmed switching. If no switching is programmed then - - : - - is shown. To program or edit the desired switching press "OK" again, with keys (Δ) and (∇) select the circuit and type of switching: C1 OFF, C1 ON . Validate with "OK" and introduce hour and minutes desired, validating then with "OK". Then select the days of the week that the switching has to operate. With keys (Δ) and (∇) place the blinking cursor on the first day of the week that the switching has to operate and then fix it by pressing "OK". Repeat this sequence with the other days of the week when the switching has to operate. For the days not desired, press (∇) to go down to the next day. After programming all the days of the week, the display will show the next switching to program.

SHORT TIME SWITCHING (PULSE) PROGRAMMING

If the selected switching is a Pulse ( ), after introducing hour and minutes when the pulse starts, use keys (Δ) and (∇) to program the length of the pulse (from 1 to 59 seconds). This length is shown in the digits of seconds (situated at the right side and smaller than the digits of hours and minutes). Select the day(s) of the week when the switching has to be programmed and validate with "OK". After that, press "C" to come back to normal mode. If "C" is not pressed, being in any mode, after two minutes, the device returns to normal mode.

VIEWING PROGRAMMED SWITCHING

The programmed switching can be checked by entering again in menu "PROG"; pressing key (Δ) all the switching are shown in display, and after the last one, the display shows - - : - -, if there is any free space and then it shows the number of free spaces.

EDITING OR DELETING SWITCHING

Programmed switching can be edited or deleted in menu "PROG", selecting with keys (Δ) or (∇) the switching to be edited or deleted. To edit it, proceed as in clause PROGRAMMING and to delete it, keep pressing key "OK" and then press key "C". To delete all the switching without using RESET, go to the point where the display shows the free spaces of memory, keep pressing key "OK" and then press key "C". The display will show 32, the total free memory spaces.

MANUAL OVERRIDE

In normal mode, pressing key ∇ (C1), circuit C1 is activated or deactivated.
If any manual override is executed, it is represented in display by symbol ( ).
The next programmed switching cancels the manual override and the symbol ( ) disappear from the display.

PERMANENT OVERRIDE

This option blocks all the programmed switching. In normal mode, keep pressing key "C" and then press key ∇ (C1) to activate the permanent position of circuit; this situation is indicated in display with symbol ( ). After that, the state of the circuit can be changed by pressing key ∇ (C1).
To cancel permanent override keep pressing key "C" and then press key ∇ (C1), symbol ( ) disappear from display.

WINTER / SUMMER OFFICIAL TIME CHANGE

Enter "menu" by pressing key "OK"; select option ( ) using keys (Δ) and (∇), validate with "OK". There are the three following working modes:

AUTO: The clock is automatically changed on the last Sunday in March al 02:00 and the last Sunday in October at 03:00.
PRO: Allows to choose the date and time for the time change, programming first the Winter – Summer change ( ) and then the Summer – Winter change ( ).
OFF: No time change will be made

HOLIDAY PROGRAM

This function allows to deactivate the circuits during a period of time up to 99 days. After that, the programming continues as usual.
If user validates 0 days, the holiday period is cancelled and the device will work in a normal way. If user validates a number o days different than 0, the device starts immediately, so relays switch to OFF and programmed switching will not execute.
If the validated number of days is 1, the holiday period will finish at 23:59:59 of the same day than validation. If the validation number of days is 2, the holiday period will finish next day. And so on.
Display shows symbol ( ) during the holiday period.

SUSTITUTION OF THE BATTERY

ATTENTION
To replace the battery, insert a screwdriver into the lower section of the battery compartment and lightly press downwards.
Remove the spent battery, fit a new one into the battery-holder and reinsert it into the battery compartment.

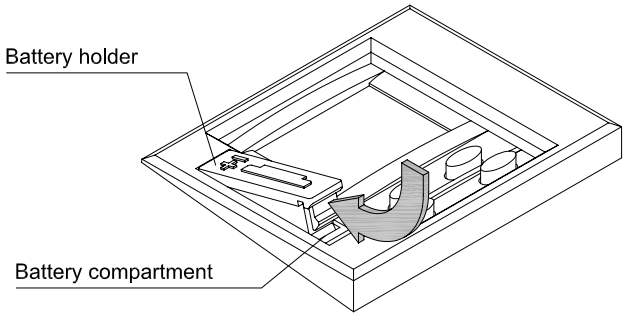

TECHINCAL FEATURES

Power supply	As indicated on the device
Switching capacity:	16 A / 250 V~ cos φ= 1 10 A / 250 V~ cos φ= 0,6
Contact type and material	Changeover $AgSnO_2$
Power consumption:	6 VA 1 circuit (aprox.1 W)
Action type:	1B, 1S, 1T and 1U
Memory spaces:	32
Type of switchings:	ON OFF PULSE (from 1 to 59 s)
Switching accuracy:	Better than 1 second
Operating accuracy:	≤ ± 1 s/ day at 23 ºC
Power reserve:	5 years (Lithium battery) at 23 ºC
Operating temperature:	- 10 ºC to + 45 ºC
Protection category:	IP 20 according to EN 60529
Protection class:	II according to EN 60335 when mounted as intended
Pollution situation:	Normal
Sealable cover	

DIMENSIONS

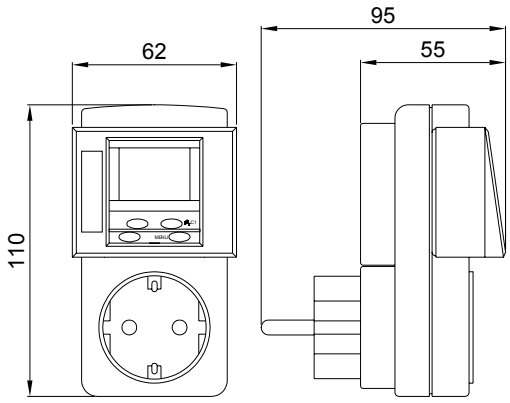

PROGRAMMING EXAMPLE

We want to connect a load from 09:00 to 18:00 from Monday to Friday.
(It is considered that there are no other programming).

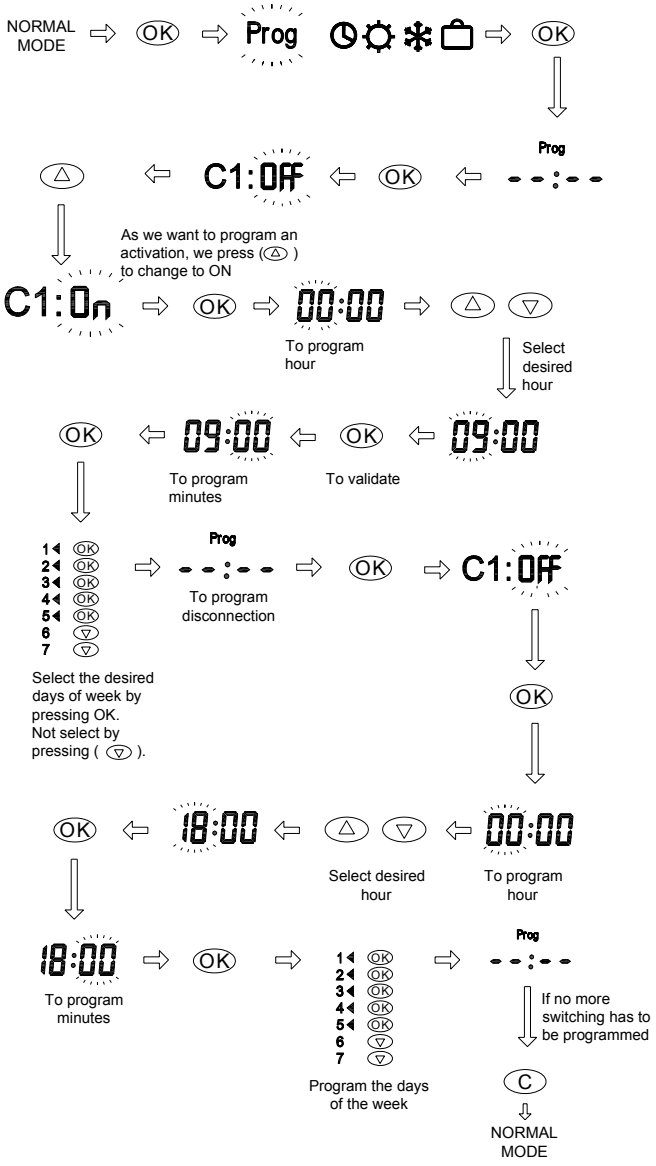

PULSE PROGRAMMING EXAMPLE

We want to connect a bell at 09:00 for 15 seconds at Monday, Thursday and Saturday.

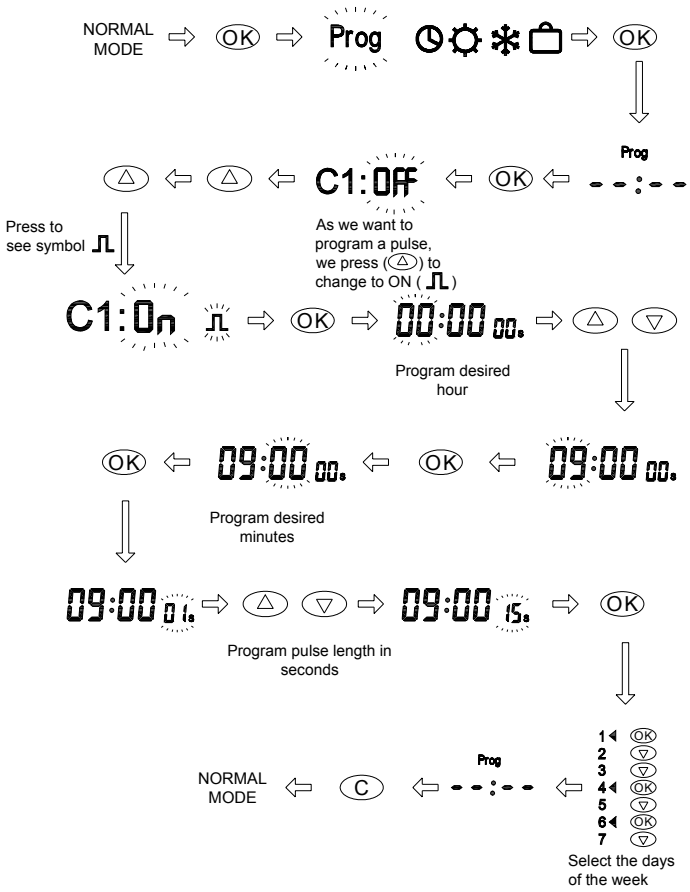

A016.16.53103

ORBIS TECNOLOGÍA ELÉCTRICA, S.A.
Lérida, 61 E–28020 MADRID
Teléfono:+ 34 91 5672277; Fax:+34 91 5714006
E-mail: info@ orbis.es
http://www.orbis.es