Haze Battery Company Ltd

Sealed Lead Acid 2 Volt Bloc AGM Range

CONSTRUCTION - AGM battery construction is as shown in the diagram below. The positive and negative grids are cast from a calcium / tin lead alloy to reduce grid growth and corrosion. The active material is manufactured from high purity lead (99.9999%) to minimise the negative effects of impurities.
Separator is a mat of random woven acid resistant glass fibres, which acts as a sponge - soaking up and immobilising the electrolyte whilst maintaining good acid to plate contact and availability during discharge. "S wrapping" is employed to eliminate the risk of short circuits due to mossing and debris at the bottom of the cell.
The purpose of the separator is to maintain a constant distance between the positive and negative plates, thus removing the possibility of short circuits whilst allowing the active material to fully react with the electrolyte. The random weaving also results in an open structure, which offers minimal resistance to the flow of electrolyte during filling.
A compression platform at the bottom of the cell allows expansion and contraction of the plates.

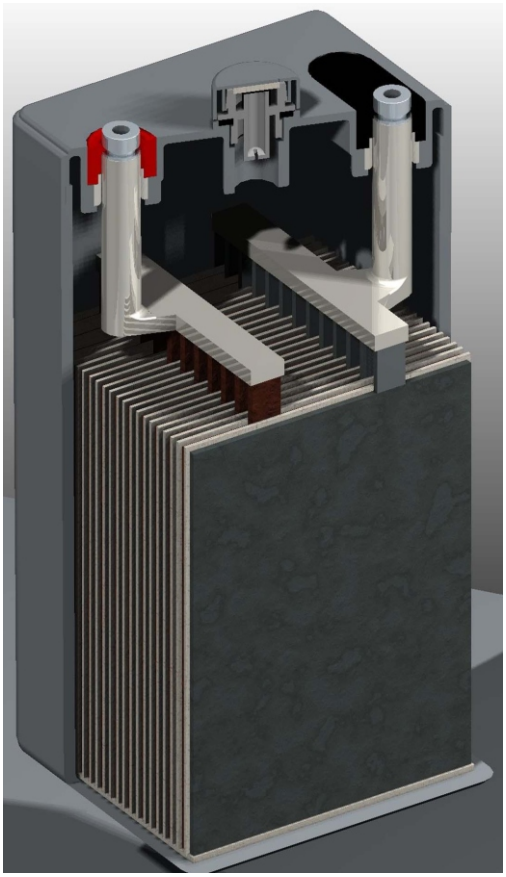

AGM construction with case removed and cover cut away to show internal battery parts.

ELECTROLYTE FILLING -Special production and QC systems are utilised to ensure the electrolyte saturation is optimised for each battery. The battery design and construction negates the need for electrolyte addition and the battery remains maintenance free throughout its design life.

SAFETY RELEASE VALVE- The battery will operate above atmospheric pressure under normal operating conditions, however the maximum pressure is governed by the safety release valve. Open is activated by pressures in excess of approx. 2 psi (14 Kpa), resealing at approx 1.2 psi (8.4 Kpa).

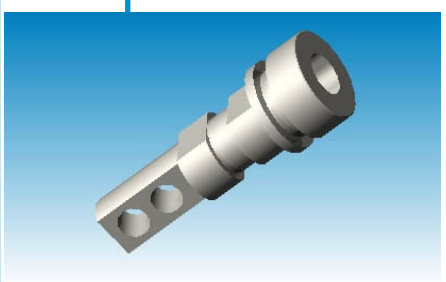

Flame Arrester - All models above and including HZB2-150 have a built in flame arrester in the valve assembly.

GAS RECOMBINATION - The gasses generated during normal operation of the battery are internally recombined. In fact more than 99% of the gas achieves recombination.

TERMINAL CONSTRUCTION - The contact quality between the insert terminal and the lead post is of vital importance during short duration / high Amp discharges. Elevated terminal temperatures are the result of poor contact, eventually causing seal degradation and electrolyte leaks. Haze design and assembly technique for terminal casting ensures trouble free operation for the design life of the battery.

AGM Vs Gel

Each battery has advantages and disadvantages, it is therefore important to choose the right battery for the application.

Advantages of AGM Batteries:

- Lower initial cost when compared to Gelled Electrolyte cells.
- Ideal for starting and stationary applications.
- Superior performancefor shorter duration / higher current discharges.
- Smaller size battery can be used for higher rate discharges.

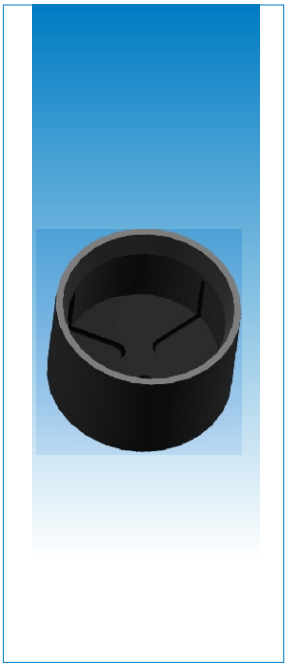

Applications

- Float service
- Uninterruptible Power Supplies
- Medical
- Telecommunications
- Switch Gear
- Photovoltaic
- Solar
- Wind
- Control Systems
- Cellular Radio Stations
- Cathodic Protection
- Navigation Aids
- Marine equipment
- Electric Power Systems

Capacity temperature correction Factor to be applied to Data at 20 Degrees C

Discharge Time	-30 °C	-20 °C	-10 °C	0 °C	5 °C	10 °C	15 °C	20 °C	25 °C	30 °C	35 °C	40 °C	50 °C
5 minutes to 59 minutes	0.23	0.417	0.605	0.778	0.86	0.91	0.96	1	1.037	1.063	1.085	1.1	1.116
1 Hour to 100 Hours	0.277	0.464	0.647	0.816	0.886	0.93	0.97	1	1.028	1.05	1.063	1.07	1.078

CHEMICAL REACTION- The chemical reaction for the Discharge / Recharge process is represented by the following formula:

PbO_2	+	$2H_2SO_4$	+	Pb	Discharging	$PbSO_4$	+	$2H_2O$
Lead Dioxide		Sulfuric Acid		Sponge Lead	$\rightleftharpoons$ Charging	Lead Sulphate Pos & Neg Plates		Water

Under normal float charge conditions the oxygen passes through the separator from the positive to the negative plate where it reacts with the negative active material to form lead oxide.

$$2Pb + O_2 \longrightarrow 2PbO$$

In the acid conditions the lead oxide reacts with the sulfuric acid to form lead sulphate.

$$2PbO + 2H_2SO_4 \longrightarrow 2PbSO_4 + 2H_2O$$

The lead suphate formed on the negative is then reduced to lead and sulfuric acid by the evolving hydrogen.

$$2PbSO_4 + 2H_2 \longrightarrow 2Pb + 2H_2SO_4$$

If the equations are resolved and like terms cancelled out on both sides of the equation the result is:

$$2H_2 + O_2 \longrightarrow 2H_2O$$

This reaction summarises what is meant by GAS RECOMBINATION. The process can never be 100% efficient, normal recombination efficiency is 95 - 99%.

Specifications

Nominal Voltage	2 Volts
Design Life	15 Years
Operating Temperature	-20 ˚C to 50 ˚C
Grid alloy	Calcium / Tin lead alloy
Plates	Flat Pasted
Separator	Absorbant Glass Mat
Active material	Very high purity lead
Case and cover	ABS (VO on request)
Charge Voltage	Float - See table, Cycling 2.4 @20 ˚C Max. 2.4 VPC Max ripple 3.5% Charge V
Electrolyte	Sulphuric acid Analytical grade purity
Venting Valve	EPDM Rubber 1.5 to 2 psi (10.5 - 14 KPa) release pressure. Resealing at 1 psi (7 KPa)
Terminal	Epoxy sealed by extended mechanical paths
Torque setting	The recommended torque value for all types is 5-7 Nm
Cables	Connectors supplied as standard, cables on request.

Haze Battery Company keenly encourages environmental awareness; PLEASE follow guidelines for the recycling /disposal of lead.

Innovative Features

- Completely maintenance free, sealed construction eliminates the need for watering
- Increased durability and deep cycle ability for heavy demand applications
- Special Formation process
- Analytical Grade electrolyte
- Spill proof / leak proof
- Valve regulated Max internal pressure 2.5 psi
- Multi-position usage
- ABS Case and cover - V0 on request
- Low self discharge
- FAA and IATA approved as non-hazardous
- Built to comply with IEC 896-2, DIN 43534, BS 6290 Pt4, Eurobat.

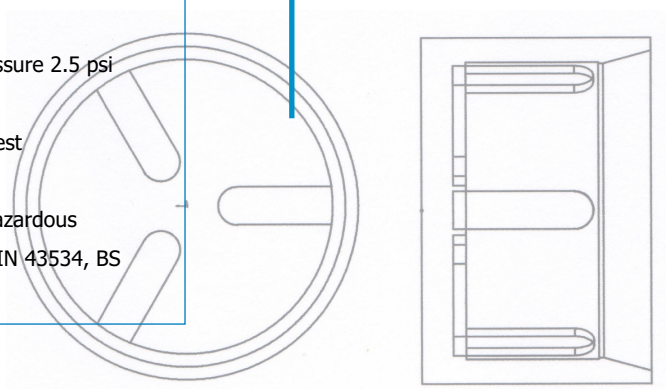

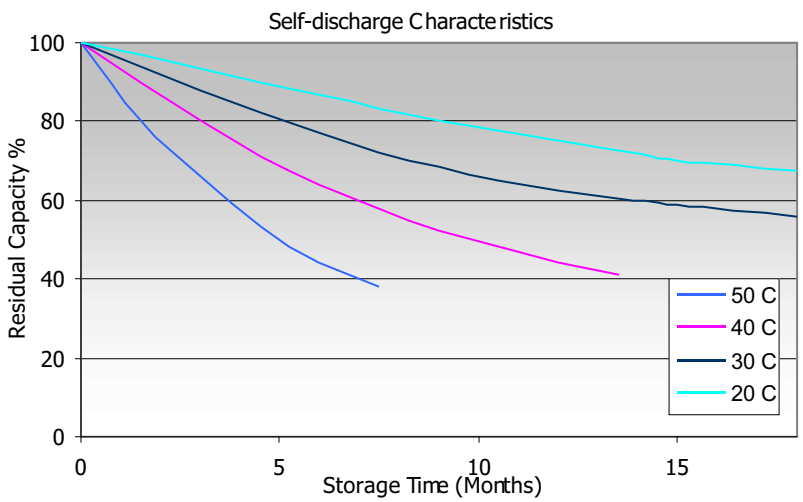

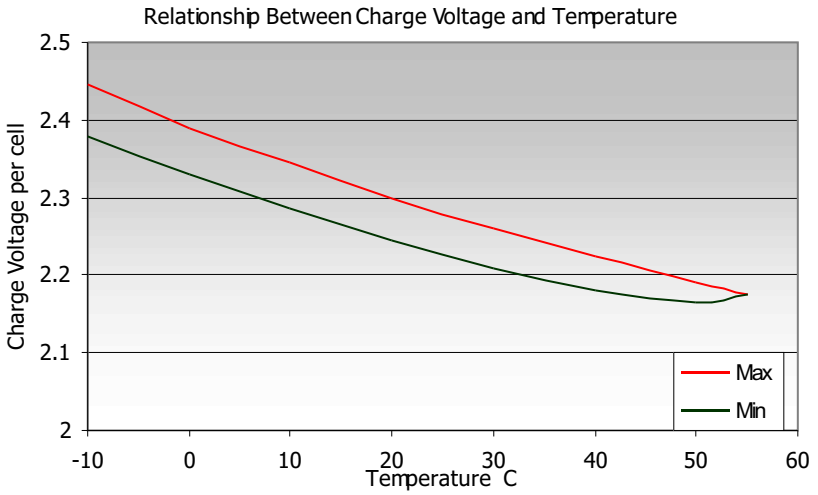

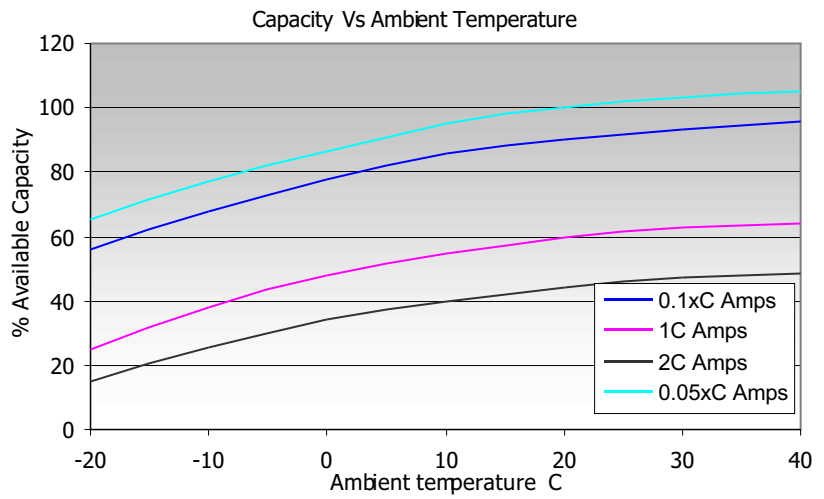

CHARGING CHARACTERISTICS

Floating - The optimum float voltage for a battery is temperature dependant, at 15 - 24°C the recommended value is 2.27 - 2.30V. It is recommended that battery installation sites are temperature controlled, however float voltage can be increased or decreased to compensate for temperature variations. Adjustment is calculated at +/- 3 mV per degree C.

Operating Temperature	Recommended Applied Float Voltage VPC
0-9	2.33 - 2.35
10-14	2.30 - 2.33
15-19	2.27 - 2.30
20-24	2.27 - 2.30
25-29	2.25 - 2.27
30-34	2.23 - 2.25
35-40	2.21 - 2.23

The most suitable charging method for battery life and performance is the constant voltage method with a limited initial current, usually limited to a maximum of $C_{20}/4$.

Amps & Ampere Hour Data

Battery Model	Time in Minutes - Amps to **1.85 VPC**								
	15	20	25	30	35	40	45	60	90
HZB2-50	74.4	64.4	56.7	50.6	45.8	41.9	38.5	30.7	22.0
HZB2-100	153	132	116	105	94.7	86.4	79.1	62.8	45.2
HZB2-150	210	180	161	143	128	118	108	87.3	64.0
HZB2-200	227	206	191	175	160	149	138	113	85.3
HZB2-250	290	257	236	219	202	189	176	146	111
HZB2-300	340	300	276	257	239	224	209	173	132
HZB2-375	426	387	358	331	304	284	264	217	162
HZB2-400	490	449	400	369	342	317	293	242	180
HZB2-450	511	465	428	393	361	335	309	256	190
HZB2-500	567	512	473	442	415	386	357	293	220
HZB2-575	646	578	535	498	457	426	397	324	244
HZB2-600	681	621	569	525	481	446	412	340	252
HZB2-625	710	642	588	546	505	467	431	354	263
HZB2-750	851	763	711	656	601	557	516	426	317
HZB2-800	922	833	760	699	643	594	552	454	340
HZB2-1000	1128	1029	943	870	804	746	692	567	421
HZB2-1250	1372	1270	1185	1092	1007	932	867	710	525
HZB2-1500	1702	1557	1426	1310	1201	1115	1030	851	635
HZB2-1875	2099	1897	1759	1616	1483	1373	1269	1045	781
HZB2-2000	2164	2008	1851	1724	1608	1500	1387	1135	839
HZB2-2500	2760	2520	2345	2164	1995	1854	1716	1418	1059
HZB2-3000	3280	2995	2755	2550	2363	2205	2059	1702	1266
HZB2-3850	4260	3822	3495	3268	3051	2850	2643	2185	1621

Battery Model	Time in Minutes - Amps to **1.80 VPC**								
	15	20	25	30	35	40	45	60	90
HZB2-50	77.8	66.5	58.2	52.3	47.1	42.9	39.5	31.5	22.6
HZB2-100	161	137	121	108	97.1	88.4	80.9	64.6	46.4
HZB2-150	226	193	169	150	133	123	113	91.2	66.7
HZB2-200	244	221	207	188	172	159	148	121	89.1
HZB2-250	313	276	252	231	212	198	184	151	114
HZB2-300	366	323	293	270	252	236	219	180	136
HZB2-375	458	416	379	347	319	297	275	225	167
HZB2-400	518	464	416	380	351	324	301	247	184
HZB2-450	563	512	462	423	389	360	332	271	202
HZB2-500	610	551	504	470	433	402	373	303	227
HZB2-575	695	633	578	532	486	453	421	342	256
HZB2-600	732	660	605	556	517	479	443	362	269
HZB2-625	763	678	624	578	532	492	457	375	278
HZB2-750	932	833	765	705	645	596	549	449	333
HZB2-800	988	888	813	752	689	638	590	480	356
HZB2-1000	1232	1116	1013	932	860	800	741	605	447
HZB2-1250	1528	1386	1260	1156	1067	990	916	747	555
HZB2-1500	1864	1671	1524	1392	1282	1194	1107	902	673
HZB2-1875	2340	2097	1905	1738	1590	1478	1359	1114	831
HZB2-2000	2428	2193	2016	1856	1724	1599	1476	1205	893
HZB2-2500	3084	2760	2521	2326	2143	1998	1845	1509	1117
HZB2-3000	3588	3220	2954	2750	2560	2378	2214	1804	1338
HZB2-3850	4697	4224	3857	3562	3302	3054	2842	2324	1720

Battery Model	Time in Minutes - Amps to **1.75 VPC**								
	15	20	25	30	35	40	45	60	90
HZB2-50	80.3	68.2	59.6	53.4	47.9	43.8	40.1	32.1	22.9
HZB2-100	166	141	124	110	99.3	90.3	82.7	65.6	47.3
HZB2-150	237	202	177	157	140	129	118	94.8	69.3
HZB2-200	277	240	218	196	180	167	154	125	92.7
HZB2-250	326	287	260	239	218	203	189	154	116
HZB2-300	386	338	307	283	262	244	226	186	140
HZB2-375	498	439	397	363	332	306	285	232	172
HZB2-400	553	483	431	393	361	333	308	251	187
HZB2-450	604	545	489	448	413	382	352	286	210
HZB2-500	668	591	538	492	451	416	385	312	234
HZB2-575	760	684	614	564	515	476	440	360	265
HZB2-600	820	726	653	598	546	506	467	382	281
HZB2-625	832	741	670	610	563	521	483	398	292
HZB2-750	1013	897	814	747	683	628	581	476	351
HZB2-800	1059	947	854	786	725	672	621	505	373
HZB2-1000	1344	1185	1068	982	898	836	776	631	467
HZB2-1250	1668	1488	1344	1228	1128	1046	968	789	580
HZB2-1500	2008	1779	1610	1476	1353	1248	1157	940	699
HZB2-1875	2528	2244	2045	1858	1700	1568	1447	1181	877
HZB2-2000	2640	2358	2160	1986	1824	1686	1555	1263	930
HZB2-2500	3296	2952	2693	2468	2288	2112	1957	1586	1171
HZB2-3000	3904	3498	3178	2936	2730	2537	2348	1900	1407
HZB2-3850	5064	4521	4099	3764	3485	3234	3000	2438	1796

Battery Model	Time in Hours					Amps to **1.85 VPC**			
	2	3	4	5	6	8	10	12	24
HZB2-50	17.5	12.9	10.3	8.6	7.5	6.0	4.9	4.2	2.2
HZB2-100	36.0	26.3	21.0	17.6	15.3	12.2	10.0	8.5	4.5
HZB2-150	51.4	38.0	30.5	25.7	22.3	17.7	14.7	12.5	6.4
HZB2-200	69.3	50.8	40.7	34.5	30.0	24.0	19.8	16.8	8.7
HZB2-250	89.7	66.1	52.7	44.2	38.3	30.4	25.1	21.3	11.0
HZB2-300	107	78.8	63.2	53.0	46.0	36.5	30.2	25.6	13.2
HZB2-375	133	98.9	79.0	66.2	57.2	45.5	37.5	31.8	16.7
HZB2-400	146	107	85.3	71.3	61.2	48.4	40.0	34.0	18.1
HZB2-450	153	112	88.8	74.4	64.6	51.4	42.4	36.0	18.9
HZB2-500	177	129	103	86.4	74.7	59.6	49.4	42.1	22.5
HZB2-575	200	146	117	97.8	84.5	67.0	55.4	47.1	24.8
HZB2-600	204	150	121	102	88.7	70.3	57.8	49.1	26.0
HZB2-625	212	156	125	105	90.3	71.9	59.5	50.7	27.1
HZB2-750	255	187	149	125	109	86.1	70.7	60.1	31.9
HZB2-800	275	204	163	138	119	94.9	78.4	66.7	35.3
HZB2-1000	339	247	198	166	144	115	94.3	80.2	42.2
HZB2-1250	424	312	250	209	181	144	118	100	52.6
HZB2-1500	509	373	299	249	216	172	142	120	63.2
HZB2-1875	637	467	372	313	270	215	177	150	79.7
HZB2-2000	679	497	396	334	289	230	189	160	84.6
HZB2-2500	849	621	493	414	359	287	236	200	106
HZB2-3000	1019	743	595	498	433	345	284	241	127
HZB2-3850	1308	969	762	639	556	441	363	309	163

Battery Model	Time in Hours					Amps to **1.80 VPC**			
	2	3	4	5	6	8	10	12	24
HZB2-50	18.0	13.2	10.6	8.8	7.7	6.1	5.0	4.3	2.2
HZB2-100	37.0	27.0	21.5	18.1	15.7	12.4	10.2	8.7	4.6
HZB2-150	53.5	39.4	31.6	26.4	23.0	18.3	15.2	12.8	6.6
HZB2-200	72.3	53.0	42.3	35.8	31.1	24.7	20.5	17.4	9.0
HZB2-250	92.0	67.8	54.1	45.4	39.3	31.2	25.8	21.9	11.3
HZB2-300	110	80.5	64.5	54.0	46.9	37.3	30.8	26.2	13.5
HZB2-375	137	102	81.6	68.1	58.9	46.8	38.4	32.7	17.0
HZB2-400	149	109	87.0	72.5	62.5	49.7	40.9	34.7	18.5
HZB2-450	163	119	95.0	79.2	68.7	54.6	45.1	38.3	20.2
HZB2-500	183	133	106	89.0	76.9	61.4	50.7	43.3	23.2
HZB2-575	208	153	122	101.8	88.0	69.8	57.7	48.9	25.9
HZB2-600	217	159	127	106	92.0	73.4	60.2	51.2	27.3
HZB2-625	225	165	132	110	95.6	75.8	62.8	53.4	28.6
HZB2-750	271	199	159	134	116	91.6	75.2	63.9	34.0
HZB2-800	289	212	169	142	123	97.8	81.0	69.2	36.7
HZB2-1000	361	264	210	177	154	122	100	85.3	45.0
HZB2-1250	451	331	264	221	192	153	126	106	56.2
HZB2-1500	541	394	316	265	230	183	151	128	67.2
HZB2-1875	677	497	397	332	288	229	188	160	84.8
HZB2-2000	722	530	422	353	308	245	201	170	90.5
HZB2-2500	903	662	527	443	384	306	251	213	114
HZB2-3000	1084	795	632	531	461	367	301	256	136
HZB2-3850	1391	1025	816	680	592	469	386	329	174

Battery Model	Time in Hours					Amps to **1.75 VPC**			
	2	3	4	5	6	8	10	12	24
HZB2-50	18.3	13.4	10.7	9.0	7.8	6.2	5.1	4.3	2.3
HZB2-100	37.7	27.5	22.0	18.4	16.0	12.6	10.4	8.8	4.6
HZB2-150	55.3	40.5	32.5	27.3	23.7	18.8	15.5	13.2	6.8
HZB2-200	74.7	54.7	43.6	36.8	32.0	25.4	20.9	17.8	9.2
HZB2-250	94.1	69.1	55.4	46.4	40.0	31.7	26.2	22.3	11.5
HZB2-300	113	82.7	65.9	55.1	48.0	38.1	31.5	26.7	13.8
HZB2-375	140	104	82.9	69.3	60.1	47.4	39.2	33.3	17.4
HZB2-400	151	111	88.7	74.0	63.8	50.6	41.7	35.4	18.9
HZB2-450	169	124	98.8	82.6	71.8	56.9	46.9	39.9	21.0
HZB2-500	188	138	110	92.2	79.5	63.1	52.3	44.4	23.9
HZB2-575	215	158	126	105	91.2	72.5	59.6	50.6	26.8
HZB2-600	226	165	132	111	95.8	76.3	62.7	53.3	28.4
HZB2-625	235	173	137	114	99.2	78.8	65.3	55.6	29.9
HZB2-750	282	209	166	139	120	94.8	78.3	66.5	35.4
HZB2-800	301	221	176	147	128	101.0	83.6	71.1	38.0
HZB2-1000	375	275	219	184	160	127	104	88.8	46.9
HZB2-1250	469	348	278	231	200	159	131	111	58.5
HZB2-1500	563	413	330	276	240	191	157	133	70.2
HZB2-1875	705	522	416	347	300	238	196	166	88.5
HZB2-2000	750	552	440	370	320	255	209	177	94.4
HZB2-2500	947	696	552	463	400	317	261	221	118
HZB2-3000	1128	832	661	554	480	381	313	267	142
HZB2-3850	1448	1067	850	708	616	489	402	342	181

Amps & Ampere Hour Data

Battery Model	Time in Hours Ah to **1.85 VPC**											
	1.5	2	3	4	5	6	7	8	10	12	20	24
HZB2-50	33.0	35.0	38.6	41.2	43.1	45.1	46.3	47.6	49.1	50.1	51.8	52.4
HZB2-100	67.8	72.0	78.8	84.0	88.2	91.6	95.1	97.4	100	102	106	108
HZB2-150	96	103	114	122	128	134	139	142	147	150	153	154
HZB2-200	128	139	152	163	173	180	186	192	198	202	207	209
HZB2-250	166	179	198	211	221	230	237	243	251	256	262	265
HZB2-300	197	213	236	253	265	276	285	292	302	307	316	318
HZB2-375	243	266	297	316	331	343	355	364	375	382	395	402
HZB2-400	271	292	321	341	357	367	379	387	400	408	428	434
HZB2-450	285	306	336	355	372	388	401	411	424	432	449	453
HZB2-500	330	353	387	413	432	448	463	477	494	505	530	540
HZB2-575	366	399	438	467	489	507	524	536	554	565	589	596
HZB2-600	379	408	450	484	509	532	549	562	578	589	615	625
HZB2-625	394	424	469	500	523	542	560	575	595	608	641	651
HZB2-750	476	510	562	595	624	651	671	689	707	721	753	766
HZB2-800	510	550	612	652	688	716	738	759	784	800	835	848
HZB2-1000	631	678	742	791	830	866	892	917	943	962	1001	1013
HZB2-1250	788	848	937	1000	1045	1085	1120	1150	1180	1200	1244	1262
HZB2-1500	953	1018	1120	1194	1245	1298	1348	1378	1420	1440	1501	1516
HZB2-1875	1171	1274	1400	1486	1567	1622	1680	1721	1770	1800	1880	1912
HZB2-2000	1259	1358	1491	1582	1668	1736	1796	1841	1890	1920	2002	2031
HZB2-2500	1588	1698	1862	1972	2069	2155	2238	2293	2360	2400	2507	2552
HZB2-3000	1899	2038	2229	2378	2492	2600	2693	2758	2843	2892	3020	3056
HZB2-3850	2432	2616	2907	3049	3195	3336	3450	3530	3630	3708	3862	3910

Battery Model	Time in Hours Ah to **1.80 VPC**											
	1.5	2	3	4	5	6		8	10	12	20	24
HZB2-50	33.9	35.9	39.6	42.2	44.1	45.9	47.4	48.7	50.3	51.3	52.9	53.5
HZB2-100	69.6	74.0	81.0	86.1	90.6	94.0	97.2	99.3	102	104	108	109
HZB2-150	100	107	118	126	132	138	143	146	152	154	157	159
HZB2-200	134	145	159	169	179	187	193	198	205	209	214	215
HZB2-250	171	184	204	216	227	236	243	250	258	262	269	272
HZB2-300	204	220	242	258	270	281	291	299	308	314	322	324
HZB2-375	251	275	307	326	341	353	365	374	384	392	404	409
HZB2-400	276	298	328	348	363	375	388	398	409	417	437	444
HZB2-450	303	325	358	380	396	412	426	437	451	460	478	484
HZB2-500	340	365	400	425	445	461	478	491	507	520	545	556
HZB2-575	384	415	458	486	509	528	545	558	577	587	613	622
HZB2-600	403	434	476	506	532	552	570	587	602	614	645	654
HZB2-625	417	451	496	528	552	574	593	606	628	641	674	686
HZB2-750	500	542	597	636	669	693	715	733	752	767	801	817
HZB2-800	534	579	636	677	709	739	762	782	810	830	865	881
HZB2-1000	670	721	792	840	884	922	949	974	1003	1024	1066	1079
HZB2-1250	833	902	993	1056	1107	1154	1193	1222	1255	1277	1324	1348
HZB2-1500	1009	1083	1181	1262	1326	1382	1433	1466	1511	1532	1598	1612
HZB2-1875	1247	1355	1492	1588	1660	1727	1784	1829	1883	1915	2001	2036
HZB2-2000	1340	1444	1589	1687	1766	1848	1913	1958	2011	2043	2131	2171
HZB2-2500	1676	1806	1985	2108	2215	2306	2392	2445	2511	2554	2664	2726
HZB2-3000	2007	2167	2385	2527	2654	2766	2862	2932	3011	3077	3215	3264
HZB2-3850	2580	2782	3075	3262	3400	3551	3670	3750	3862	3945	4110	4170

Battery Model	Time in Hours Ah to **1.75 VPC**											
	2	2	3	4	5	6	7	8	10	12	20	24
HZB2-50	34.4	36.5	40.3	42.9	44.9	46.8	48.2	49.7	51.3	52.1	53.9	54.8
HZB2-100	70.9	75.3	82.5	88.0	92.0	95.8	99.0	101	104	106	110	111
HZB2-150	104	111	122	130	136	142	147	150	155	158	161	163
HZB2-200	139	149	164	175	184	192	198	203	209	214	219	220
HZB2-250	174	188	207	222	232	240	248	253	262	267	273	277
HZB2-300	210	226	248	264	276	288	297	305	315	320	327	332
HZB2-375	258	279	312	332	346	361	371	379	392	400	412	417
HZB2-400	281	302	334	355	370	383	395	405	417	425	446	453
HZB2-450	316	339	373	395	413	431	444	455	469	478	497	503
HZB2-500	351	376	413	440	461	477	494	505	523	533	560	573
HZB2-575	397	429	475	502	527	547	565	580	596	607	631	643
HZB2-600	422	452	494	526	553	575	594	610	627	639	671	682
HZB2-625	438	469	518	548	572	595	614	630	653	667	701	717
HZB2-750	527	564	626	665	693	721	743	758	783	799	834	850
HZB2-800	560	602	662	703	737	766	789	808	836	853	891	911
HZB2-1000	700	750	825	876	921	959	990	1014	1044	1066	1109	1126
HZB2-1250	870	939	1043	1111	1156	1201	1240	1272	1306	1329	1378	1403
HZB2-1500	1049	1127	1240	1320	1382	1438	1493	1528	1572	1595	1663	1685
HZB2-1875	1315	1410	1567	1662	1736	1800	1856	1904	1960	1993	2082	2124
HZB2-2000	1395	1500	1657	1760	1848	1923	1989	2037	2092	2126	2218	2265
HZB2-2500	1757	1893	2089	2209	2314	2400	2480	2532	2613	2658	2772	2833
HZB2-3000	2111	2256	2495	2644	2771	2879	2973	3045	3133	3202	3345	3413
HZB2-3850	2694	2895	3200	3400	3538	3696	3820	3910	4019	4106	4277	4350

Battery Model	Time in Minutes - Amps to **1.70 VPC**								
	15	20	25	30	35	40	45	60	90
HZB2-50	82.9	69.9	60.8	54.4	48.7	44.5	40.7	32.5	23.3
HZB2-100	170	144	127	112	101.2	92.0	83.7	66.5	48.0
HZB2-150	247	209	184	162	145	132	121	96.9	70.7
HZB2-200	283	245	222	204	187	173	159	129	94.9
HZB2-250	339	295	268	244	224	207	192	157	118
HZB2-300	405	350	314	290	269	249	231	189	142
HZB2-375	529	460	410	372	338	314	291	237	175
HZB2-400	576	503	447	406	370	339	313	255	191
HZB2-450	634	566	507	462	423	392	359	292	215
HZB2-500	707	620	557	508	464	428	395	319	237
HZB2-575	805	702	636	579	529	486	447	367	270
HZB2-600	865	755	684	618	565	522	483	391	289
HZB2-625	864	772	694	628	577	531	492	406	298
HZB2-750	1059	926	847	762	696	642	594	486	358
HZB2-800	1130	992	887	813	745	687	635	517	381
HZB2-1000	1408	1233	1111	1016	928	860	795	646	476
HZB2-1250	1732	1530	1378	1260	1157	1071	988	805	592
HZB2-1500	2113	1856	1663	1521	1396	1290	1187	959	713
HZB2-1875	2647	2326	2093	1905	1744	1611	1489	1213	894
HZB2-2000	2764	2436	2215	2033	1872	1727	1588	1288	949
HZB2-2500	3476	3091	2784	2540	2348	2165	1996	1618	1195
HZB2-3000	4164	3666	3324	3049	2816	2600	2395	1938	1435
HZB2-3850	5304	4701	4243	3912	3611	3345	3074	2487	1832

Battery Model	Time in Hours					Amps to **1.70 VPC**			
	2	3	4	5	6	8	10	12	24
HZB2-50	18.5	13.6	10.9	9.1	7.9	6.3	5.2	4.4	2.3
HZB2-100	38.3	27.9	22.3	18.6	16.2	12.8	10.5	8.9	4.7
HZB2-150	56.5	41.5	33.3	27.9	24.2	19.1	15.7	13.3	6.9
HZB2-200	76.2	55.6	44.4	37.2	32.4	25.7	21.3	18.1	9.3
HZB2-250	95.3	70.0	56.0	47.0	40.5	32.1	26.5	22.5	11.7
HZB2-300	114	83.6	66.7	55.9	48.7	38.6	31.9	27.1	14.0
HZB2-375	141	105	84.1	70.5	60.8	48.0	39.5	33.5	17.8
HZB2-400	154	113	90.0	75.2	65.1	51.4	42.6	36.1	19.3
HZB2-450	173	126	100.5	84.0	73.0	58.0	47.9	40.7	21.4
HZB2-500	191	139	111	93.4	80.8	63.9	52.8	44.8	24.1
HZB2-575	219	161	129	107	93.1	74.0	60.8	51.6	27.3
HZB2-600	230	169	135	113	97.7	77.8	63.9	54.3	29.0
HZB2-625	239	176	140	117	101	80.4	66.6	56.7	30.4
HZB2-750	288	213	169	141	123	96.6	79.8	67.9	36.1
HZB2-800	307	226	180	150	131	103.1	85.3	72.5	38.7
HZB2-1000	383	280	224	188	163	129	106	90.6	47.8
HZB2-1250	479	354	283	236	204	162	133	113	59.3
HZB2-1500	575	426	339	283	246	195	160	136	71.3
HZB2-1875	719	532	424	355	306	243	200	169	90.0
HZB2-2000	767	568	452	377	327	260	213	181	96.1
HZB2-2500	964	710	564	471	408	323	267	226	121
HZB2-3000	1150	850	677	566	489	387	320	272	145
HZB2-3850	1477	1087	865	722	628	496	410	349	185

Battery Model	Time in Hours Ah to **1.70 VPC**											
	2	2	3	4	5	6	7	8	10	12	20	24
HZB2-50	35.0	37.0	40.9	43.5	45.6	47.6	49.1	50.2	52.0	52.9	54.8	55.6
HZB2-100	72.0	76.6	83.8	89.1	93.1	96.9	99.8	102	105	107	111	112
HZB2-150	106	113	124	133	140	145	150	153	157	160	164	166
HZB2-200	142	152	167	177	186	194	200	205	213	217	221	224
HZB2-250	177	191	210	224	235	243	250	257	265	270	277	281
HZB2-300	213	228	251	267	280	292	301	309	319	325	332	335
HZB2-375	262	283	316	336	352	365	376	384	395	403	420	426
HZB2-400	287	307	339	360	376	390	402	411	426	434	455	463
HZB2-450	322	345	379	402	420	438	450	464	479	488	507	514
HZB2-500	356	381	418	445	467	485	499	511	528	538	566	579
HZB2-575	405	438	484	514	537	558	577	592	608	619	644	655
HZB2-600	434	461	506	538	563	586	605	622	639	652	685	695
HZB2-625	447	479	529	561	586	609	628	643	666	680	715	730
HZB2-750	538	576	638	677	707	736	757	773	798	815	850	866
HZB2-800	571	614	677	720	752	785	805	825	853	870	909	928
HZB2-1000	714	765	841	896	940	978	1008	1034	1065	1087	1131	1148
HZB2-1250	887	957	1063	1132	1180	1226	1262	1298	1333	1355	1406	1424
HZB2-1500	1070	1149	1277	1357	1416	1478	1522	1560	1604	1626	1689	1712
HZB2-1875	1341	1438	1595	1697	1774	1837	1892	1942	1999	2033	2124	2160
HZB2-2000	1423	1533	1704	1806	1887	1961	2025	2078	2134	2169	2262	2306
HZB2-2500	1792	1927	2130	2256	2356	2448	2519	2584	2665	2711	2828	2893
HZB2-3000	2153	2301	2550	2707	2829	2936	3025	3097	3196	3266	3412	3472
HZB2-3850	2748	2953	3260	3460	3612	3770	3900	3970	4099	4188	4362	4450

Watts Per Cell Data

Battery Model	Time in Minutes - Watts per cell to **1.85 VPC**								
	15	20	25	30	35	40	45	60	90
HZB2-50	140	121	107	95.6	86.0	79.1	72.9	58.4	42.7
HZB2-100	277	242	214	192	173	158	146	119	86.0
HZB2-150	385	337	300	272	246	226	208	169	125
HZB2-200	415	378	352	325	302	283	265	220	166
HZB2-250	546	501	462	427	394	368	342	284	216
HZB2-300	623	565	520	488	457	432	408	343	257
HZB2-375	784	714	660	624	585	551	513	422	315
HZB2-400	831	771	715	662	618	581	543	451	342
HZB2-450	988	894	821	754	695	642	596	490	365
HZB2-500	1038	943	874	822	770	720	667	551	413
HZB2-575	1183	1064	995	936	869	813	757	633	472
HZB2-600	1288	1140	1056	984	922	864	803	663	493
HZB2-625	1299	1160	1077	1015	951	893	827	682	507
HZB2-750	1557	1425	1311	1220	1131	1058	984	814	613
HZB2-800	1661	1524	1399	1301	1195	1118	1052	878	657
HZB2-1000	2076	1865	1739	1612	1493	1404	1311	1086	808
HZB2-1250	2532	2337	2174	2031	1882	1755	1636	1354	1009
HZB2-1500	3064	2812	2614	2430	2282	2130	1980	1630	1220
HZB2-1875	3841	3491	3270	3006	2771	2600	2425	2011	1507
HZB2-2000	3976	3694	3450	3216	2986	2804	2622	2173	1612
HZB2-2500	5076	4632	4297	4063	3797	3551	3277	2716	2033
HZB2-3000	6000	5490	5136	4840	4539	4245	3960	3259	2431
HZB2-3850	7840	7033	6552	6160	5717	5385	5048	4183	3113

Battery Model	Time in Minutes - Watts per cell to **1.80 VPC**								
	15	20	25	30	35	40	45	60	90
HZB2-50	146	125	110	98.2	88.2	81.2	74.8	60.0	43.8
HZB2-100	291	252	222	198	177	162	150	121	88.2
HZB2-150	414	357	317	285	258	236	216	177	130
HZB2-200	447	407	377	350	325	303	281	231	173
HZB2-250	588	529	484	446	411	380	353	292	221
HZB2-300	670	613	563	525	481	450	422	354	265
HZB2-375	838	745	689	655	608	569	529	432	323
HZB2-400	893	822	761	699	647	600	563	463	351
HZB2-450	1052	942	862	796	737	684	634	519	388
HZB2-500	1116	1014	938	874	814	756	703	578	430
HZB2-575	1272	1144	1070	995	925	858	797	665	492
HZB2-600	1380	1227	1128	1049	969	906	846	693	516
HZB2-625	1396	1248	1158	1072	997	938	869	720	537
HZB2-750	1696	1539	1409	1311	1213	1130	1049	860	647
HZB2-800	1786	1629	1504	1399	1288	1200	1120	924	687
HZB2-1000	2233	2006	1855	1720	1609	1506	1410	1159	858
HZB2-1250	2848	2556	2317	2160	1997	1863	1737	1431	1066
HZB2-1500	3396	3030	2801	2596	2415	2250	2103	1727	1292
HZB2-1875	4192	3795	3516	3233	3000	2792	2607	2152	1604
HZB2-2000	4465	4041	3737	3466	3218	3009	2811	2308	1715
HZB2-2500	5582	4981	4621	4369	4096	3809	3524	2869	2132
HZB2-3000	6640	5925	5528	5200	4829	4530	4227	3455	2569
HZB2-3850	8596	7772	7278	6728	6246	5805	5428	4450	3302

Battery Model	Time in Minutes - Watts per cell to **1.75 VPC**								
	15	20	25	30	35	40	45	60	90
HZB2-50	150	128	112	99.8	89.8	82.5	76.1	61.0	44.7
HZB2-100	302	257	226	201	180	165	152	123	90.4
HZB2-150	432	372	328	294	265	242	222	181	134
HZB2-200	491	433	395	367	338	313	289	237	178
HZB2-250	618	547	502	458	420	389	360	299	226
HZB2-300	751	655	598	553	507	468	439	364	270
HZB2-375	904	792	730	680	630	584	543	441	330
HZB2-400	976	867	794	732	667	621	579	477	359
HZB2-450	1126	992	907	836	773	716	663	548	404
HZB2-500	1220	1080	986	918	853	791	732	602	447
HZB2-575	1400	1221	1133	1051	961	890	830	689	508
HZB2-600	1492	1314	1210	1106	1012	941	874	725	540
HZB2-625	1528	1344	1238	1140	1051	978	910	750	561
HZB2-750	1836	1626	1498	1378	1263	1178	1092	896	673
HZB2-800	1952	1752	1608	1474	1355	1260	1171	960	711
HZB2-1000	2400	2136	1956	1800	1676	1568	1463	1212	896
HZB2-1250	3032	2706	2458	2280	2094	1949	1819	1496	1114
HZB2-1500	3624	3240	2969	2718	2519	2352	2180	1800	1343
HZB2-1875	4548	4053	3718	3412	3145	2928	2729	2236	1673
HZB2-2000	4840	4347	3982	3670	3394	3162	2933	2419	1786
HZB2-2500	5940	5349	4901	4607	4287	3987	3685	3009	2249
HZB2-3000	7120	6390	5880	5530	5119	4755	4413	3639	2702
HZB2-3850	9200	8250	7656	7040	6519	6045	5640	4669	3448

Battery Model	Time in Hours Watts per cell to **1.85 VPC**										
	2	3	4	5	6	7	8	10	12	20	24
HZB2-50	34.3	25.2	20.3	17.2	15.0	13.3	11.9	9.9	8.4	5.2	4.3
HZB2-100	68.9	51.1	41.3	34.8	30.3	26.8	24.1	20.0	17.0	10.6	8.9
HZB2-150	101	75.5	61.3	51.7	44.9	39.8	35.8	29.9	25.5	15.6	13.1
HZB2-200	135	100	80.9	68.3	59.5	52.7	47.2	39.4	33.4	20.7	17.4
HZB2-250	174	130	104	87.6	76.0	67.3	60.4	50.5	43.1	26.5	22.2
HZB2-300	208	155	125	106	91.8	81.6	73.0	60.9	51.7	31.7	26.5
HZB2-375	257	194	156	131	114	101	90.5	75.9	65.0	40.3	34.0
HZB2-400	279	206	165	139	120	107	95.7	79.8	67.9	42.8	36.2
HZB2-450	296	218	175	148	130	114	102	84.5	72.0	45.2	38.2
HZB2-500	339	252	204	171	149	132	118	98.2	83.3	52.0	43.8
HZB2-575	385	286	231	195	169	150	134	111	95.3	58.9	49.6
HZB2-600	399	294	237	199	174	154	138	115	98.3	61.9	52.6
HZB2-625	410	305	246	209	182	161	145	121	103	65.3	55.3
HZB2-750	497	369	296	250	217	193	172	144	123	76.7	65.0
HZB2-800	532	397	320	269	232	206	183	154	131	82.2	69.5
HZB2-1000	655	488	393	331	287	254	227	188	160	100	84.8
HZB2-1250	820	609	491	412	358	317	284	235	200	125	105
HZB2-1500	984	728	586	494	432	382	342	283	240	150	127
HZB2-1875	1231	910	733	617	533	474	425	353	300	188	159
HZB2-2000	1309	969	776	657	570	505	453	377	320	201	169
HZB2-2500	1641	1210	967	815	707	627	565	471	400	251	213
HZB2-3000	1970	1448	1166	982	853	756	677	564	482	302	255
HZB2-3850	2528	1870	1496	1259	1095	969	867	724	618	388	328

Battery Model	Time in Hours Watts per cell to **1.80 VPC**										
	2	3	4	5	6	7	8	10	12	20	24
HZB2-50	35.0	25.7	20.8	17.6	15.3	13.6	12.1	10.1	8.6	5.3	4.4
HZB2-100	70.7	52.2	42.2	35.5	31.0	27.4	24.6	20.5	17.4	10.8	9.1
HZB2-150	105	78.4	62.9	53.1	46.2	41.0	36.8	30.6	25.9	15.9	13.4
HZB2-200	141	104	83.7	70.6	61.5	54.5	48.7	40.6	34.6	21.3	17.9
HZB2-250	178	132	106	89.4	77.5	68.6	61.6	51.4	43.9	26.9	22.6
HZB2-300	214	159	128	108	93.7	83.1	74.5	62.0	52.7	32.3	27.1
HZB2-375	263	198	160	134	117	103	92.5	77.4	66.2	41.0	34.7
HZB2-400	285	211	170	142	123	109	98.0	81.6	69.4	43.8	37.0
HZB2-450	315	233	186	158	137	122	109	89.9	76.6	48.1	40.6
HZB2-500	349	261	210	177	153	136	122	101	85.8	53.4	45.2
HZB2-575	399	299	241	203	176	156	139	116	98.8	61.3	51.7
HZB2-600	419	309	248	208	181	161	144	120	102	64.6	54.9
HZB2-625	434	322	259	219	190	169	151	126	108	68.0	57.6
HZB2-750	524	387	310	261	228	202	181	150	128	80.3	67.9
HZB2-800	559	413	332	279	243	215	191	160	137	85.8	72.6
HZB2-1000	697	515	414	349	303	269	241	200	171	107	90.4
HZB2-1250	872	645	518	436	379	336	301	250	213	133	112
HZB2-1500	1046	767	619	522	456	406	363	301	255	160	135
HZB2-1875	1303	966	777	650	567	504	451	375	319	201	170
HZB2-2000	1389	1032	827	696	606	538	482	401	340	214	181
HZB2-2500	1745	1290	1034	873	757	674	605	501	425	267	227
HZB2-3000	2095	1549	1239	1046	908	807	721	600	513	321	272
HZB2-3850	2689	1998	1600	1340	1166	1033	922	770	657	413	350

Battery Model	Time in Hours Watts per cell to **1.75 VPC**										
	2	3	4	5	6	7	8	10	12	20	24
HZB2-50	35.5	26.2	21.1	17.9	15.5	13.7	12.3	10.2	8.7	5.3	4.5
HZB2-100	72.3	53.4	43.2	36.2	31.6	28.0	25.1	20.8	17.7	11.0	9.3
HZB2-150	108	80.6	64.5	54.3	47.3	41.8	37.4	31.1	26.4	16.3	13.6
HZB2-200	145	108	86.3	72.5	62.8	55.6	49.7	41.4	35.3	21.8	18.3
HZB2-250	181	135	108	90.8	78.8	69.7	62.4	52.1	44.4	27.3	23.0
HZB2-300	218	162	130	110	95.2	84.4	75.4	62.9	53.3	32.8	27.6
HZB2-375	269	203	163	136	118	105	94.0	78.3	66.9	41.7	35.1
HZB2-400	291	217	173	145	126	111	99.6	82.9	70.6	44.7	37.7
HZB2-450	327	242	195	164	142	126	113	93.6	79.7	50.0	42.4
HZB2-500	362	270	217	183	159	140	125	104	88.4	55.2	46.6
HZB2-575	415	308	248	208	180	159	142	119	101	62.7	53.0
HZB2-600	436	321	258	216	189	167	149	125	106	67.2	57.5
HZB2-625	454	334	269	225	196	174	156	130	111	70.3	59.6
HZB2-750	546	403	324	273	237	210	188	156	133	83.6	70.9
HZB2-800	579	430	347	292	253	225	199	167	142	89.3	75.8
HZB2-1000	725	539	432	364	315	280	251	208	178	111	94.3
HZB2-1250	907	677	545	455	394	350	312	260	221	138	117
HZB2-1500	1089	813	647	545	474	420	376	313	266	167	141
HZB2-1875	1361	1011	815	684	590	524	469	391	332	209	177
HZB2-2000	1445	1076	863	728	631	560	500	417	354	222	188
HZB2-2500	1816	1357	1084	912	792	701	628	521	443	278	236
HZB2-3000	2180	1621	1297	1092	945	840	750	625	533	335	285
HZB2-3850	2798	2079	1668	1394	1213	1071	960	801	684	430	365

Watts Per Cell Data

Battery Model	Time in Minutes - Watts per cell to **1.70 VPC**								
	15	20	25	30	35	40	45	60	90
HZB2-50	153	130	114	102	91.6	83.7	77.1	61.7	45.1
HZB2-100	312	262	229	204	183	167	154	125	91.6
HZB2-150	447	382	335	300	270	247	227	185	137
HZB2-200	511	446	406	375	344	318	294	241	180
HZB2-250	639	563	510	466	427	394	366	302	229
HZB2-300	789	677	610	566	517	477	444	369	273
HZB2-375	958	837	765	704	644	596	552	450	335
HZB2-400	1028	906	822	751	681	635	588	484	366
HZB2-450	1172	1041	941	862	792	734	676	559	412
HZB2-500	1279	1129	1022	946	872	810	751	612	455
HZB2-575	1457	1277	1181	1080	990	912	846	703	522
HZB2-600	1565	1375	1260	1143	1053	972	907	740	556
HZB2-625	1597	1405	1290	1176	1078	1002	928	766	572
HZB2-750	1916	1686	1547	1410	1294	1203	1114	915	688
HZB2-800	2046	1806	1673	1512	1396	1296	1196	979	725
HZB2-1000	2508	2217	2016	1848	1717	1601	1491	1236	914
HZB2-1250	3136	2785	2523	2320	2140	1989	1855	1520	1136
HZB2-1500	3825	3411	3084	2814	2587	2411	2224	1836	1370
HZB2-1875	4791	4233	3854	3525	3234	3014	2800	2298	1717
HZB2-2000	5112	4530	4092	3761	3471	3213	2985	2467	1821
HZB2-2500	6256	5568	5122	4720	4377	4077	3773	3098	2294
HZB2-3000	7600	6660	6120	5680	5256	4875	4520	3711	2756
HZB2-3850	9680	8632	7907	7237	6655	6165	5747	4762	3517

Battery Model	Time in Hours Watts per cell to **1.70 VPC**										
	2	3	4	5	6	7	8	10	12	20	24
HZB2-50	36.0	26.6	21.5	18.1	15.7	13.9	12.4	10.3	8.8	5.4	4.5
HZB2-100	73.3	54.0	43.7	36.7	32.0	28.3	25.4	21.1	17.9	11.1	9.4
HZB2-150	111	82.0	65.6	55.4	48.1	42.6	38.0	31.6	26.8	16.5	13.9
HZB2-200	147	109	87.8	73.8	63.8	56.5	50.4	42.0	35.8	22.2	18.6
HZB2-250	184	136	110	92.2	79.8	70.4	62.9	52.6	44.8	27.7	23.2
HZB2-300	220	164	133	112	96.5	85.4	76.4	63.5	53.8	33.2	27.9
HZB2-375	274	206	165	138	120	106	95.0	79.1	67.5	42.1	35.5
HZB2-400	297	220	176	148	128	113	101	83.8	71.5	45.2	38.3
HZB2-450	334	247	199	167	146	129	115	95.5	81.3	51.0	43.3
HZB2-500	368	274	220	186	161	143	127	106	90.0	55.8	47.2
HZB2-575	423	315	252	212	183	162	145	120	103	63.4	53.6
HZB2-600	445	329	264	222	193	171	153	127	109	68.6	58.5
HZB2-625	463	339	273	230	200	177	158	132	113	71.2	60.3
HZB2-750	556	410	329	278	242	214	191	158	135	84.9	72.1
HZB2-800	588	437	353	297	258	229	202	169	144	90.6	76.9
HZB2-1000	740	549	440	370	321	285	256	212	181	113	96.1
HZB2-1250	925	691	555	463	401	355	317	264	224	141	119
HZB2-1500	1111	830	661	555	482	427	383	318	271	170	144
HZB2-1875	1390	1039	832	695	602	533	478	398	339	213	180
HZB2-2000	1472	1100	886	742	644	570	510	426	361	227	192
HZB2-2500	1853	1384	1103	928	803	711	640	531	452	283	241
HZB2-3000	2224	1661	1328	1115	964	854	765	637	544	342	290
HZB2-3850	2854	2120	1697	1423	1233	1091	975	815	698	439	373

Battery Model	Time in Minutes - Watts per cell to **1.65 VPC**								
	15	20	25	30	35	40	45	60	90
HZB2-50	156	133	116	103	93.2	84.9	77.9	62.5	45.6
HZB2-100	318	268	234	208	186	170	157	127	92.7
HZB2-150	455	389	341	306	275	251	231	187	139
HZB2-200	550	479	428	387	352	325	300	244	182
HZB2-250	660	575	519	473	433	399	369	306	231
HZB2-300	842	714	638	579	529	487	453	373	276
HZB2-375	992	870	785	722	655	605	557	455	338
HZB2-400	1088	954	842	769	699	647	599	491	369
HZB2-450	1224	1080	974	884	811	750	695	573	419
HZB2-500	1340	1182	1058	974	892	827	765	623	461
HZB2-575	1560	1353	1214	1114	1012	932	867	714	533
HZB2-600	1652	1415	1272	1170	1077	998	925	754	565
HZB2-625	1692	1482	1339	1210	1106	1020	943	777	577
HZB2-750	1980	1734	1572	1443	1321	1227	1136	933	698
HZB2-800	2160	1905	1714	1552	1416	1317	1218	994	737
HZB2-1000	2608	2280	2066	1896	1753	1632	1523	1260	928
HZB2-1250	3244	2865	2568	2361	2172	2018	1879	1542	1150
HZB2-1500	3952	3474	3146	2866	2645	2450	2279	1877	1397
HZB2-1875	4928	4335	3912	3592	3299	3056	2851	2340	1745
HZB2-2000	5272	4675	4186	3830	3529	3273	3043	2506	1851
HZB2-2500	6444	5704	5218	4786	4437	4127	3836	3150	2339
HZB2-3000	7880	6895	6312	5840	5392	4965	4600	3781	2801
HZB2-3850	10120	8899	8112	7380	6775	6285	5857	4853	3573

Battery Model	Dimensions (mm) & weight (Kg)				Dimensions (Inches) & weight (lbs)				No. of Terminals	Internal Resistance mOhms	Maximum Charge Current	Short Circuit Current
	Length	Width	Height	Weight	Length	Width	Height	Weight				
HZB2-50	161	50	166	3.2	6.34	1.97	6.54	7.1	2	2.1	10	509
HZB2-100	171	72	205	6.3	6.73	2.83	8.07	13.9	2	2	20	1080
HZB2-150	172	102	205	8.1	6.77	4.02	8.07	17.9	2	1.5	30	1550
HZB2-200	173	111	329	13.7	6.81	4.37	12.95	30.2	2	0.5	40	1600
HZB2-250	173	111	329	16	6.81	4.37	12.95	35.3	2	0.45	50	2000
HZB2-300	171	151	330	18.1	6.73	5.94	12.99	39.9	2	0.4	60	2400
HZB2-375	171	151	330	21.7	6.73	5.94	12.99	47.8	2	0.39	75	3000
HZB2-400	211	176	329	26.1	8.31	6.93	12.95	57.5	4	0.36	80	3200
HZB2-450	223	187	351	29.8	8.78	7.36	13.82	65.7	4	0.33	90	3600
HZB2-500-1	211	176	329	30.3	8.31	6.93	12.95	66.8	4	0.3	100	4000
HZB2-500-2	241	172	331	30.8	9.49	6.77	13.03	67.9	4	0.3	100	4000
HZB2-575	223	187	351	33.8	8.78	7.36	13.82	74.5	4	0.29	115	4600
HZB2-600	301	175	331	37.9	11.85	6.89	13.03	83.5	4	0.28	120	4800
HZB2-625	241	172	331	36.1	9.49	6.77	13.03	79.6	4	0.25	125	5000
HZB2-750	301	175	331	44.3	11.85	6.89	13.03	97.6	4	0.22	130	6000
HZB2-800	410	175	330	50.3	16.14	6.89	12.99	110.9	8	0.2	160	6400
HZB2-1000-1	410	175	330	60	16.14	6.89	12.99	132.2	8	0.16	200	7900
HZB2-1000-2	475	175	328	62.8	18.70	6.89	12.91	138.4	8	0.16	200	7900
HZB2-1250	475	175	328	70.2	18.70	6.89	12.91	154.7	8	0.13	250	10050
HZB2-1500	401	351	342	98.6	15.79	13.82	13.46	217.3	8	0.11	300	11950
HZB2-1875	401	351	342	115.5	15.79	13.82	13.46	254.6	8	0.1	375	15050
HZB2-2000	491	351	344	128.9	19.33	13.82	13.54	284.1	8	0.09	400	16100
HZB2-2500	491	351	344	144.9	19.33	13.82	13.54	319.4	8	0.08	500	19850
HZB2-3000	762	353	341	194.8	30.00	13.90	13.43	429.3	8	0.08	600	24100
HZB2-3850	762	353	341	245.3	30.00	13.90	13.43	540.6	8	0.07	770	30800

The graph shows extrapolated Service Life condition for Haze batteries at different ambient temperatures. Clearly higher ambient temperatures will reduce service life.

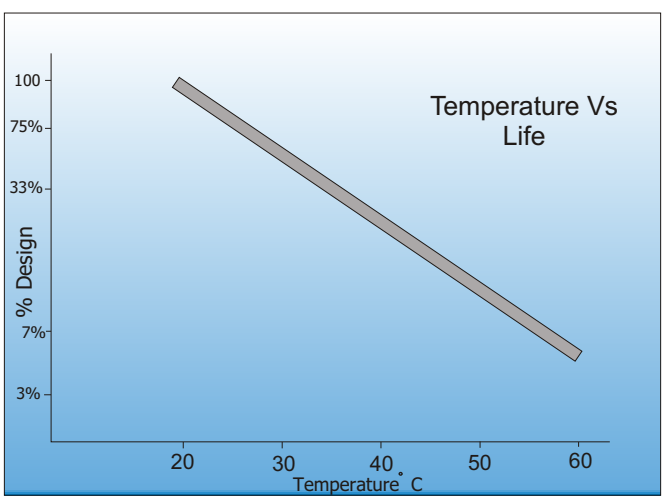

Temperature	Shelf Life
0 °C - 20 °C (32 °F - 68 °F)	12 Months
21 °C - 30 °C (69 °F - 86 °F)	9 Months
31 °C - 40 °C (87 °F - 104 °F)	5 Months
41 °C - 50 °C (105 °F - 1122 °F)	2.5 Months

CHARGING CHARACTERISTICS

Floating - The optimum float voltage for a battery is temperature dependant, at 15 - 24°C the recommended value is 2.27 - 2.30V. It is recommended that battery installation sites are temperature controlled, however float voltage can be increased or decreased to compensate for temperature variations. Adjustment is calculated at +/- 3 mV per degree C.

The most suitable charging method for battery life and performance is the constant voltage method with a limited initial current, usually limited to a maximum of $C_{20}/4$.

Typical Battery Layouts

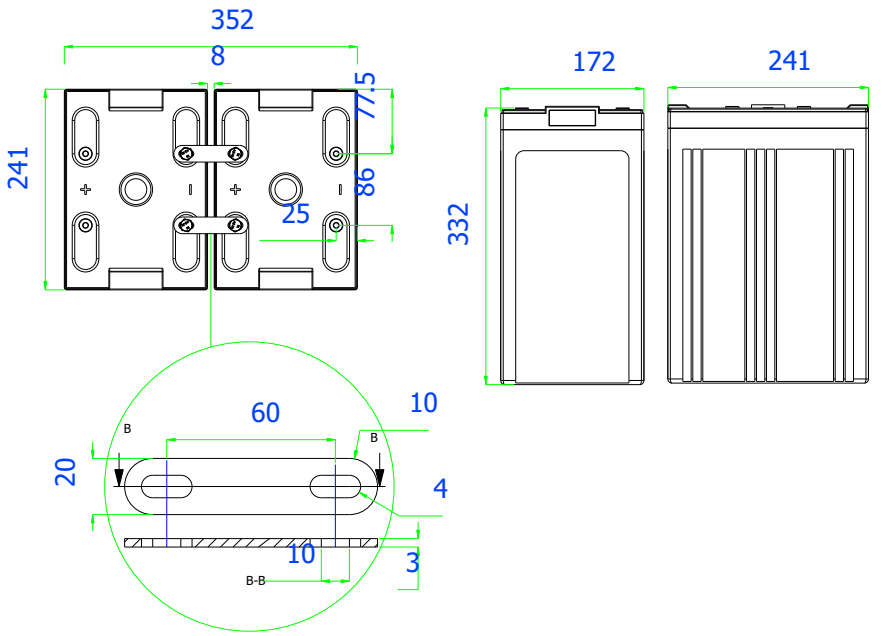

The sample battery layout drawings shown are available for all models showing terminal locations and intercell and inter battery connections. We can provide custom layouts to customers with an existing installation or footprint limitations.
Battery spacing is flexible to allow greater or smaller spacing between the cells, indeed our standard connector has 10mm of travel allowing battery spacing from 3 to 13 mm. Close spacing is only recommended in temperature controlled environments with forced cooling.
Connectors and terminal covers are supplied as standard.

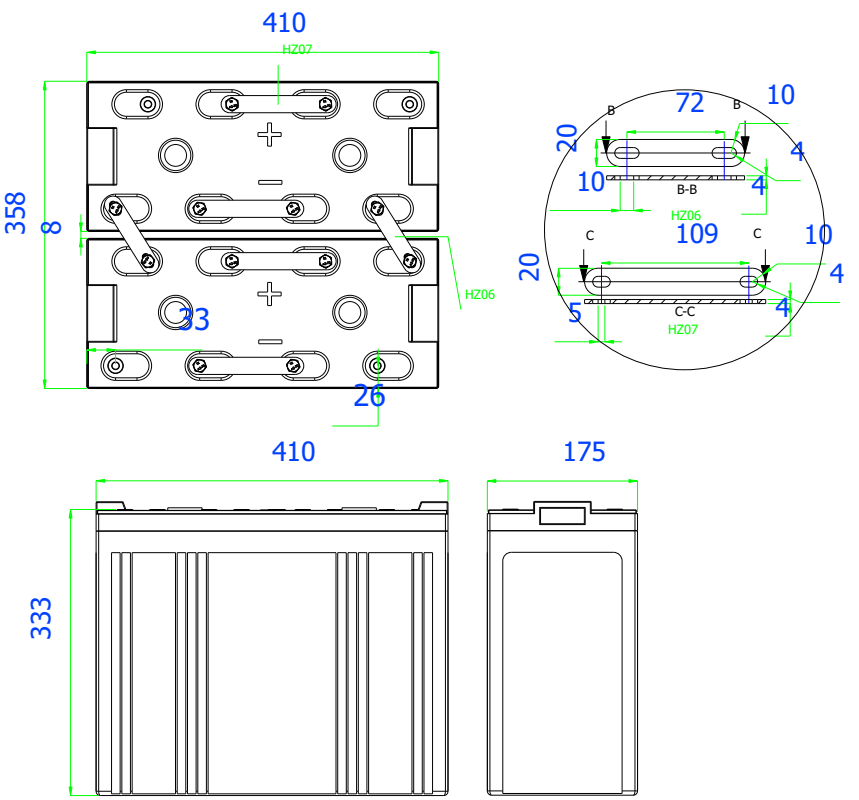

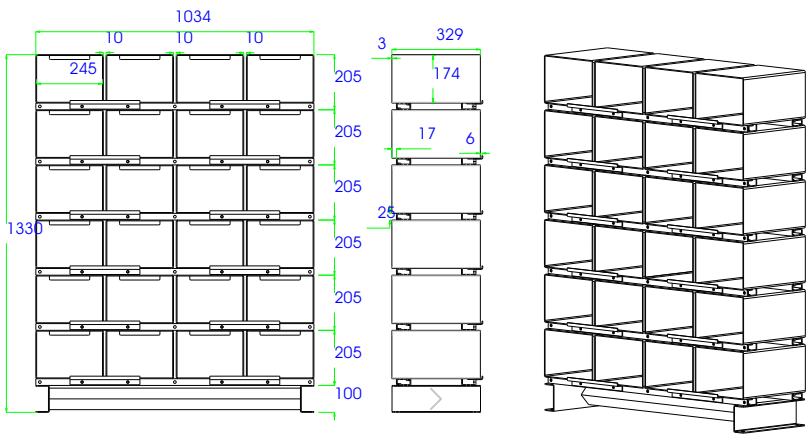

RACKING OPTIONS - Many racking options are available from Haze Battery Company. The favored style in Europe is the open rack, which can be designed to suit an existing foot print or minimised to fit the minimum possible space. Rack construction is from heavy duty steel section with welded joints or alternatively made in kit form for remote assembly.

A modular rack is also available for models HZB2-200 up to HZB2-1250. Box construction is from 3mm steel sheet, interlocking modules are slotted together and bolted in place, bolted front retainers hold the batteries in place resulting in a seismic zone 4 classified rack.

HZB2-1500 and above, due to their size and weight are more suited to vertical orientation - racking can be supplied to minimise the footprint by the use of multiple tiers. Battery retainers can be utilised to allow seismic zone 4 classification. Racks can be supplied with welded joints or as kit form for remote assembly.

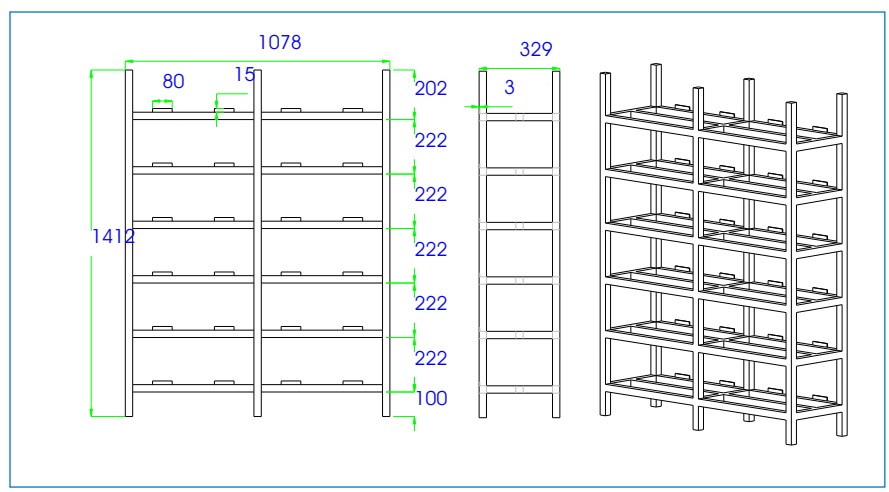

181208

VRLA Product Range

4, 6 & 12 Volt AGM 1.3 to 230AH
6 & 12 Volt Gel 7.5 to 230AH
12 Volt Front Access AGM
12 Volt Front Access Gel
2 Volt AGM & Gel 50 to 3850AH
EV Gel
EV AGM
Marine Gel
Solar