REV	CHANGE	DATE	DWN	CHK	APVD	MOD/ECN
-	SEE DRF#3043-1	01/31/02	GOF	MJK	MJK	21149
A	SEE DRF#3388-1	01/31/02	GOF	MJK	MJK	22205
B	SEE DRF#3357-1	02/14/02	DG	KA	MJK	22166

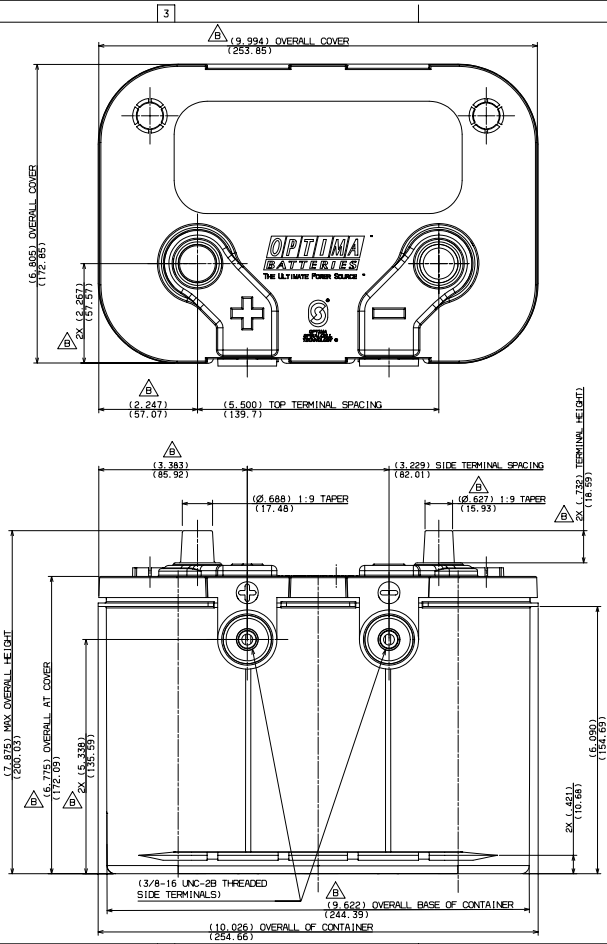

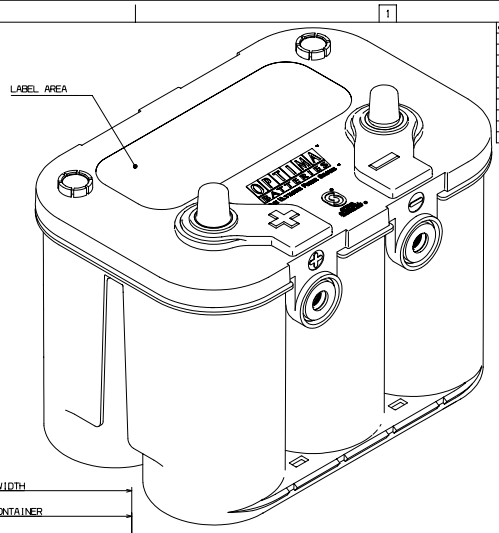

NOTE:
1. ALL DIMENSIONS ARE REFERENCE. DESIGN TOLERANCES CAN BE SUPPLIED UPON REQUEST.

APPLICATION NOTICE:

THIS BATTERY ASSEMBLY IS DESIGNED TO COMPLY WITH CUSTOMER SPECIFICATIONS PROVIDED TO JOHNSON CONTROLS BATTERY GROUP INC.. IT IS NOT INTENDED TO QUALIFY AS A SPECIFIC GROUP SIZE UNDER BCI, DIN, OR JIS SPECIFICATIONS.

NO REPRESENTATION IS MADE THAT THIS BATTERY ASSEMBLY WILL COMPLY WITH ANY BCI, DIN, OR JIS SPECIFICATION.

DO NOT SCALE DRAWING

NOTICE: THIS DRAWING IS FURNISHED FOR REFERENCE ONLY. THE FURNISHING OR POSSESSION OF THIS DRAWING OR ANY COPY THEREOF DOES NOT CONFER ANY ANY MANUFACTURING RIGHTS.

THIRD ANGLE PROJECTION

DIMENSIONS ARE IN INCHES/MILLIMETERS

JOHNSON CONTROLS BATTERY GROUP, INC.
CONFIDENTIAL AND PROPRIETARY INFORMATION

MATERIAL N/A

CAD SYSTEM CATIA

REF INFO -

TITLE ASSY_GR_34_78_CUSTOMER_ASSY_DUAL_TERMINAL_OPTIMA

SHEET	SIZE	OF	NO MODEL
1	D	1	NO

ORIGINAL RELEASE			
DWN	GOF	DATE 01/31/02	CHANGE
CHK	MJK	DATE 11/28/01	MJK
APPR	MJK	DATE 01/16/02	DATE 01/28/02

JOHNSON CONTROLS
AUTOMOTIVE SYSTEMS GROUP - BATTERY

SCALE 1/1

DWG NO 201108

REV B

D SIZE SHEET

gondsd FRAME 1 MARCH 4, 2003 11:17:34